TOP VIEW

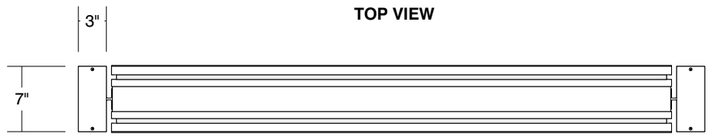

I-Flex Detail

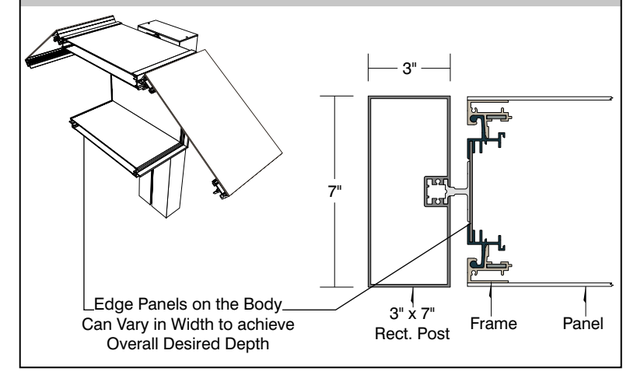

SIDE A

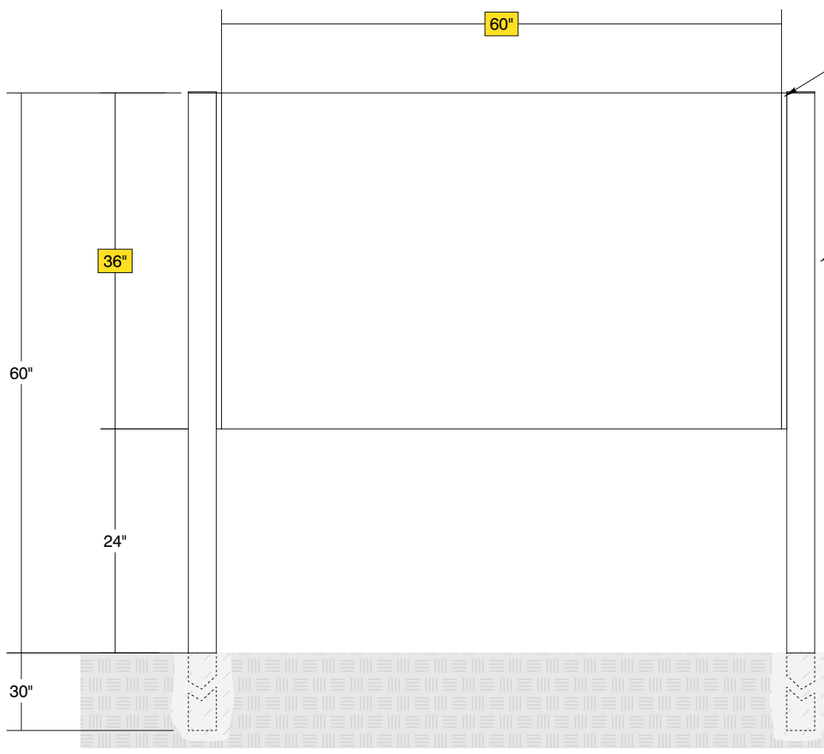

- **Sign System: 7" I-Flex Flush Face**
  - (2) .100" Aluminum Panels: (H) 36" x (L) 60"
  - **Paint**:
    - Standard White - Frame, Panels, Posts, Caps
- **Double Post Mount**
  - (2) Posts Size: 3" x 7" x (L) 90" with Caps

SIDE VIEW

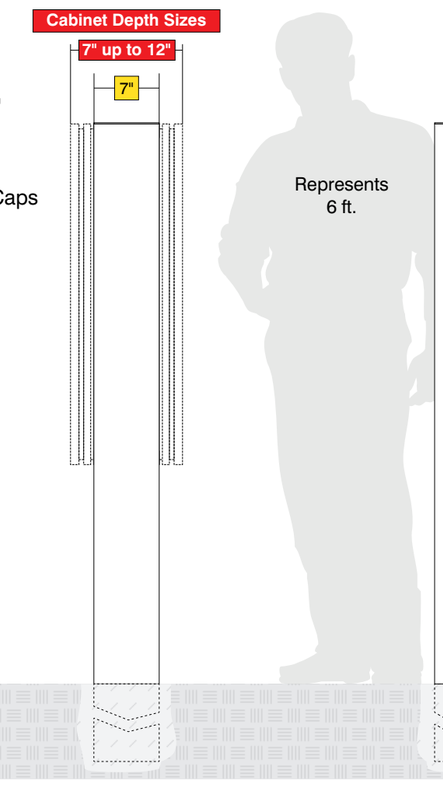

SIDE B

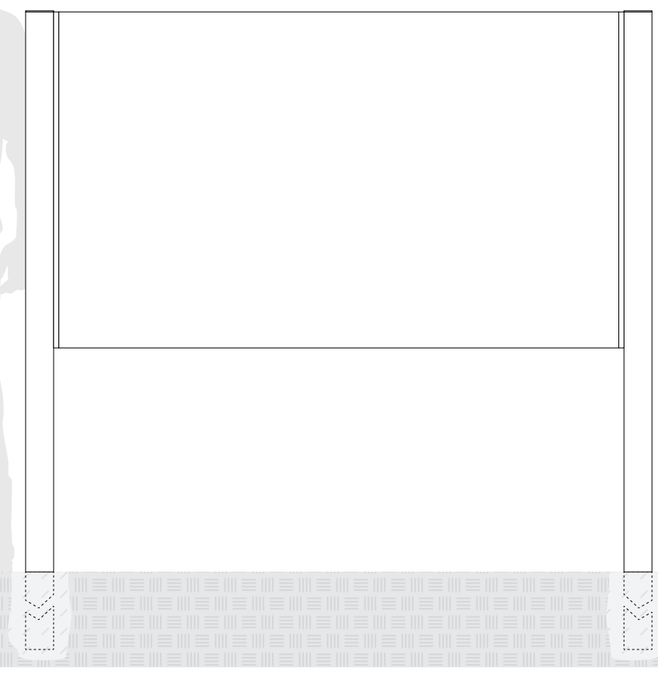

Date	DWG# HED-I-Flex_FlushFace	Scale:	1 1/2"=1'	Customer		Mounting	Double Post Mount
XX.XX.XX						SF/DF	Double Face
Quantity				Location		Illuminated	NO / UL
1						Voltage	N/A / Amp N/A
Page				System	(7" - 12") HED I-Flex (36" x 60") Post & Panel FF Sign System	ADA	No / Rev. 0
1 of 1							

*Due to the ADA/ ANSI's wide interpretation and other factors that may exist, we cannot affirm compliance in all situations and is hereby removed from responsibility regarding these issues.

Quote #	
Sales Rep.	
Illustrator:	
Reviewed By:	

SINCE 1926 HOWARD INDUSTRIES Architectural Signage Systems

• 6400 Howard Drive, Fairview PA 16415 • Toll Free 800.458.0591 • • PA 814.833.7000 • Fax 814.838.0011 • www.howardindustries.com

All concepts and designs represented by this drawing are the property of Howard Industries and may not be reproduced or used in any manner without written consent. ©Copyright 2020 Howard Industries.