TOP VIEW

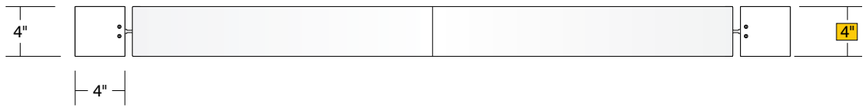

SIDE A

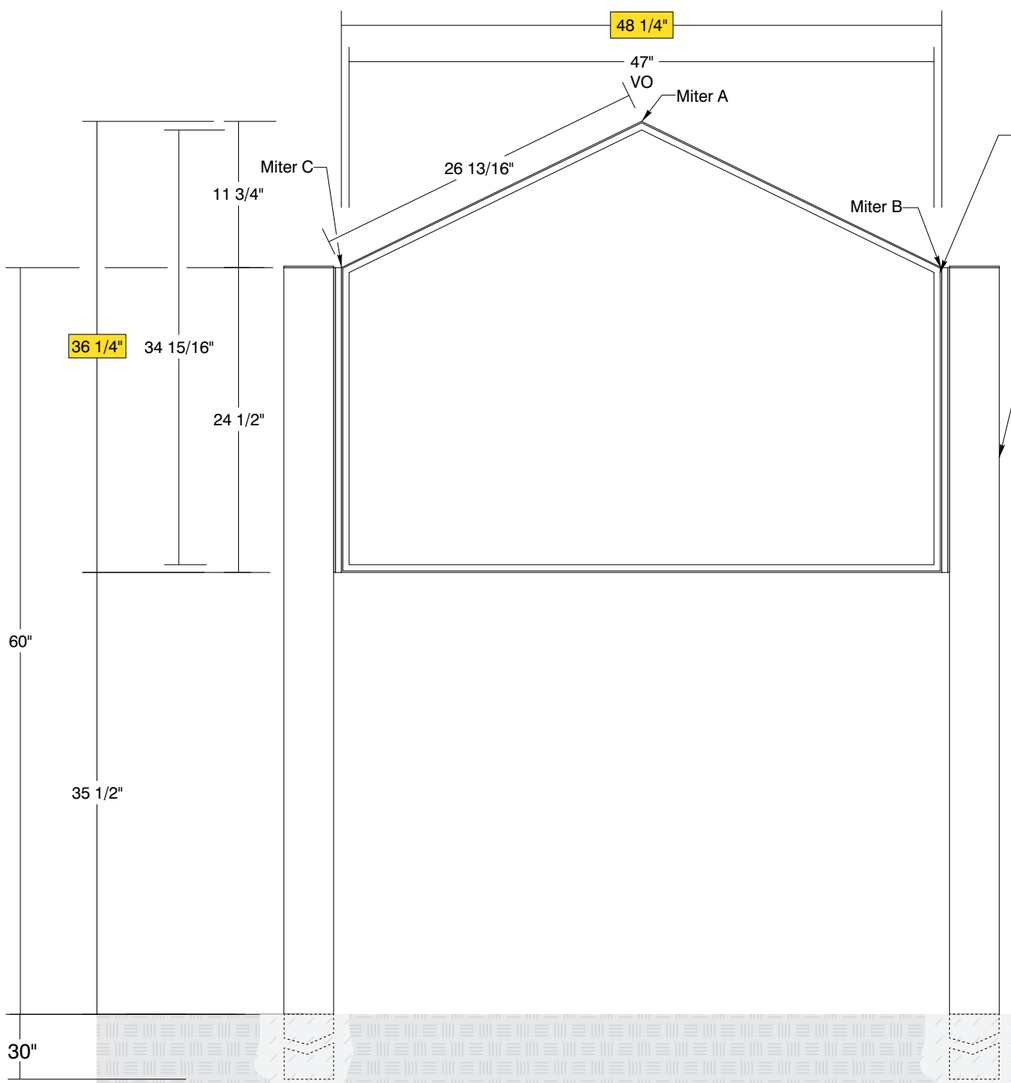

- **Sign System: HED-400 SF Peak Top**
  - Miter A: 26.1°
  - Miter B & C: 32°
- (2) .050" Aluminum Panel: (H) 36" x (L) 48"

- **Paint**:
  - ○ Standard White - Frame, Panels, Posts, Caps

- **Double Post Mount**
  - (2) Posts Size: 4" x 4" x (L) 90" with Caps

HED-400 Detail

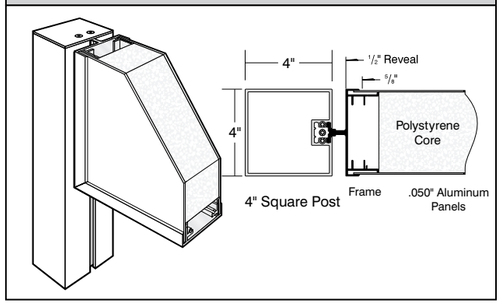

SIDE B

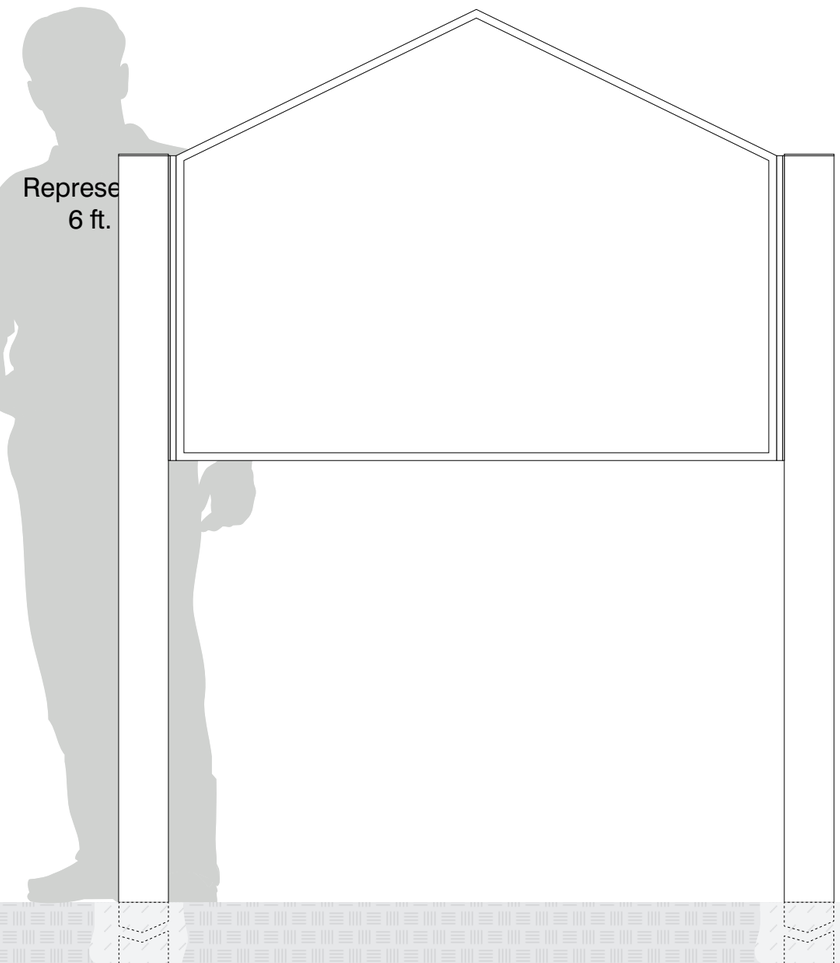

Date	DWG# HED-400_SF_PeakTop	Scale:	1"=1'	Customer		Mounting	Double Post Mount	Quote #	
XX.XX.XX						SF/DF	Double Face	Sales Rep.	
Quantity				Location		Illuminated	NO / UL		
1						Voltage	N/A / Amp N/A	Illustrator:	
Page				System	HED-400 (36"x 48") Standard Face Peak Top Sign System	ADA	No / Rev. 0		
1 of 1								Reviewed By:	

*Due to the ADA/ ANSI's wide interpretation and other factors that may exist, we cannot affirm compliance in all situations and is hereby removed from responsibility regarding these issues.

SINCE 1928 HOWARD INDUSTRIES Architectural Signage Systems

• 6400 Howard Drive, Fairview PA 16415 • Toll Free 800.458.0591 • • PA 814.833.7000 • Fax 814.838.0011 • www.howardindustries.com

All concepts and designs represented by this drawing are the property of Howard Industries and may not be reproduced or used in any manner without written consent. ©Copyright 2020 Howard Industries.