HED-200 Detail

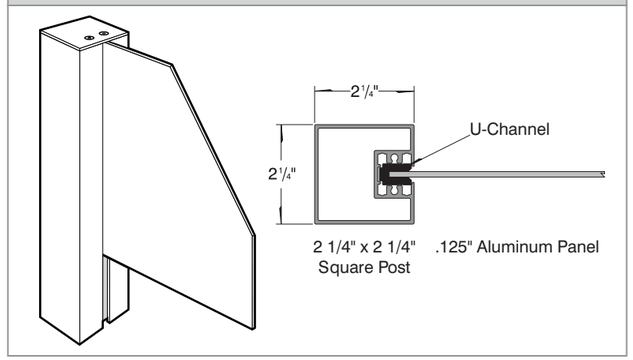

TOP VIEW

SIDE A

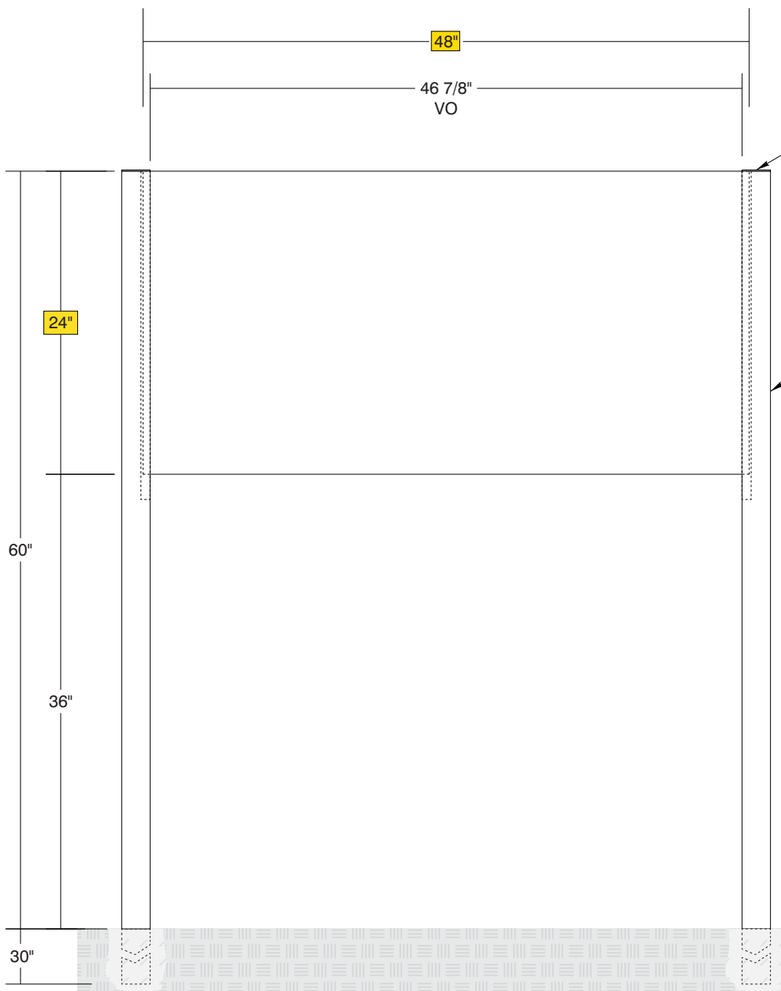

- **Sign System: HED-200**
  - (1) .125 Aluminum Panel: (H) 24" x (L) 48
    - (2) U-Channel Lengths @ 26"
- **Paint**:
  - ○ Standard White - Panel, U-Channel, Post, Caps
- **Double Post Mount**
  - (2) Post Size: 2 1/4" x 2 1/4" x (L) 90" with Caps

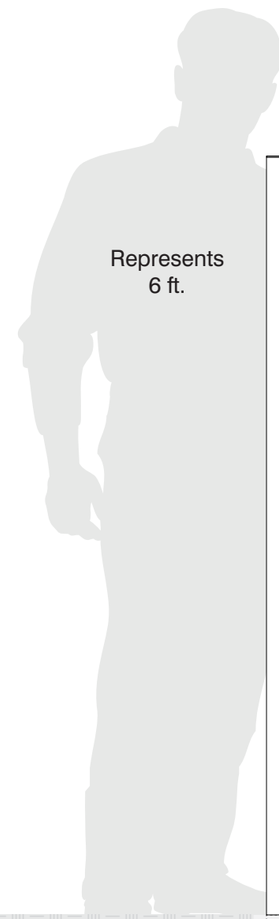

SIDE B

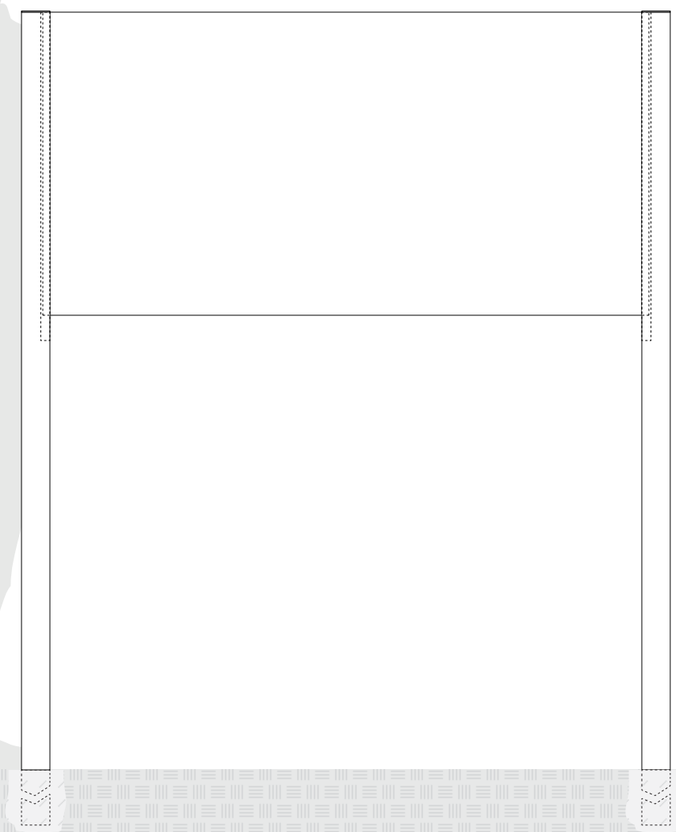

Date	**DWG#** HED-200_Standard	Scale:	3/4”=1’	**Customer**		**Mounting**	**Double Post Mount**
XX.XX.XX						**SF/DF**	**Double Face**
Quantity				**Location**		**Illuminated**	**NO** UL
1						Voltage	N/A Amp N/A
Page						**ADA**	No Rev. 0
1 of 1				**System**	**HED-200 (24" x 48) Standard Sign System**		

*Due to the ADA/ ANSI’s wide interpretation and other factors that may exist, we cannot affirm compliance in all situations and is hereby removed from responsibility regarding these issues.

Quote #	
Sales Rep.	
Illustrator:	
Reviewed By:	

SINCE 1928 HOWARD INDUSTRIES Architectural Signage Systems

• 6400 Howard Drive, Fairview PA 16415 • Toll Free 800.458.0591 • • PA 814.833.7000 • Fax 814.838.0011 • www.howardindustries.com

All concepts and designs represented by this drawing are the property of Howard Industries and may not be reproduced or used in any manner without written consent. ©Copyright 2020 Howard Industries.